B

Vertical installation

Instructions for 5G® Climb™

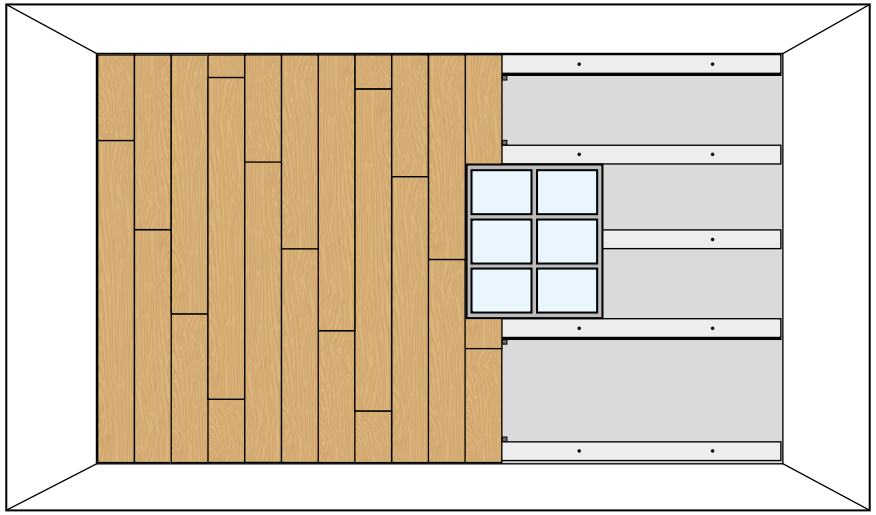

Licensed by Välinge

5G® and Climb™ are trademarks for patented technologies – invented, registered and owned by Välinge Innovation AB. Use of the mark or technology is under license.

5G CLIMB Licensed by Välinge

Patented Technology | www.5gfolddown.com

ENGLISH

Pre-Installation & Jobsite Conditions

Carefully read all the instructions before you begin the installation.

- Välinge 5G® Climb™ can be installed in most places in the home and commercial areas. They are not suitable for — and should be not installed in — humid or wet areas such as bathrooms or saunas.
- Välinge 5G® Climb™ cannot be installed on ceilings or angled walls.
- Välinge 5G® Climb™ can be installed both horizontally and vertically.
- Packages should be transported and stored horizontally — acclimatise unopened packages in a dry, well-ventilated area of the job site for at least 48 hours before installation.
- Maintain a room temperature of at least 18°C (64°F) and relative air humidity (RH) range between 35-65% during storage and installation.
- Floor panels from several different packages can be mixed to get your preferred look.
- Examine each floor panel in daylight before installation to look for any damage or visible defects in color or texture. Problems with defects need to be brought to the attention of the supplier before installation.
- As the buyer, you are responsible for approving the product — even if it is installed by a professional installer. If the product is installed, it is seen to have been approved.
- 5G® Climb™ clips are small parts, keep them away from small children.
- Max load (Endast för Välinge Flooring)

Substrates

- The substrate (the surface that 5G® Climb™ will be installed on) should be flat, load-bearing, permanently dry, and free of large cracks.
- Any unevenness greater than 3mm (1/16”) over a length of 2 meters (6 ft) needs to be levelled — use patching or levelling compound or ground/sand the area.
- Ensure the substrate is clean.
- Wallpaper should ideally be removed before installing 5G® Climb™.
- 5G® Climb™ must be installed as per the manufacturer’s instructions.

中国人

Pre-Installation & Jobsite Conditions

Carefully read all the instructions before you begin the installation.

- Välinge 5G® Climb™ can be installed in most places in the home and commercial areas. They are not suitable for — and should be not installed in — humid or wet areas such as bathrooms or saunas.
- Välinge 5G® Climb™ cannot be installed on ceilings or angled walls.
- Välinge 5G® Climb™ can be installed both horizontally and vertically.
- Packages should be transported and stored horizontally — acclimatise unopened packages in a dry, well-ventilated area of the job site for at least 48 hours before installation.
- Maintain a room temperature of at least 18°C (64°F) and relative air humidity (RH) range between 35-65% during storage and installation.
- Floor panels from several different packages can be mixed to get your preferred look.
- Examine each floor panel in daylight before installation to look for any damage or visible defects in color or texture. Problems with defects need to be brought to the attention of the supplier before installation.
- As the buyer, you are responsible for approving the product — even if it is installed by a professional installer. If the product is installed, it is seen to have been approved.
- 5G® Climb™ clips are small parts, keep them away from small children.
- Max load (Endast för Välinge Flooring)

Substrates

- The substrate (the surface that 5G® Climb™ will be installed on) should be flat, load-bearing, permanently dry, and free of large cracks.
- Any unevenness greater than 3mm (1/16”) over a length of 2 meters (6 ft) needs to be levelled — use patching or levelling compound or ground/sand the area.
- Ensure the substrate is clean.
- Wallpaper should ideally be removed before installing 5G® Climb™.
- 5G® Climb™ must be installed as per the manufacturer’s instructions.

ESPAÑOL

Pre-Installation & Jobsite Conditions

Carefully read all the instructions before you begin the installation.

- Välinge 5G® Climb™ can be installed in most places in the home and commercial areas. They are not suitable for — and should be not installed in — humid or wet areas such as bathrooms or saunas.
- Välinge 5G® Climb™ cannot be installed on ceilings or angled walls.
- Välinge 5G® Climb™ can be installed both horizontally and vertically.
- Packages should be transported and stored horizontally — acclimatise unopened packages in a dry, well-ventilated area of the job site for at least 48 hours before installation.
- Maintain a room temperature of at least 18°C (64°F) and relative air humidity (RH) range between 35-65% during storage and installation.
- Floor panels from several different packages can be mixed to get your preferred look.
- Examine each floor panel in daylight before installation to look for any damage or visible defects in color or texture. Problems with defects need to be brought to the attention of the supplier before installation.
- As the buyer, you are responsible for approving the product — even if it is installed by a professional installer. If the product is installed, it is seen to have been approved.
- 5G® Climb™ clips are small parts, keep them away from small children.
- Max load (Endast för Välinge Flooring)

Substrates

- The substrate (the surface that 5G® Climb™ will be installed on) should be flat, load-bearing, permanently dry, and free of large cracks.
- Any unevenness greater than 3mm (1/16”) over a length of 2 meters (6 ft) needs to be levelled — use patching or levelling compound or ground/sand the area.
- Ensure the substrate is clean.
- Wallpaper should ideally be removed before installing 5G® Climb™.
- 5G® Climb™ must be installed as per the manufacturer’s instructions.

FRANÇAIS

Pre-Installation & Jobsite Conditions

Carefully read all the instructions before you begin the installation.

- Välinge 5G® Climb™ can be installed in most places in the home and commercial areas. They are not suitable for — and should be not installed in — humid or wet areas such as bathrooms or saunas.
- Välinge 5G® Climb™ cannot be installed on ceilings or angled walls.
- Välinge 5G® Climb™ can be installed both horizontally and vertically.
- Packages should be transported and stored horizontally — acclimatise unopened packages in a dry, well-ventilated area of the job site for at least 48 hours before installation.
- Maintain a room temperature of at least 18°C (64°F) and relative air humidity (RH) range between 35-65% during storage and installation.
- Floor panels from several different packages can be mixed to get your preferred look.
- Examine each floor panel in daylight before installation to look for any damage or visible defects in color or texture. Problems with defects need to be brought to the attention of the supplier before installation.
- As the buyer, you are responsible for approving the product — even if it is installed by a professional installer. If the product is installed, it is seen to have been approved.
- 5G® Climb™ clips are small parts, keep them away from small children.
- Max load (Endast för Välinge Flooring)

Substrates

- The substrate (the surface that 5G® Climb™ will be installed on) should be flat, load-bearing, permanently dry, and free of large cracks.
- Any unevenness greater than 3mm (1/16”) over a length of 2 meters (6 ft) needs to be levelled — use patching or levelling compound or ground/sand the area.
- Ensure the substrate is clean.
- Wallpaper should ideally be removed before installing 5G® Climb™.
- 5G® Climb™ must be installed as per the manufacturer’s instructions.

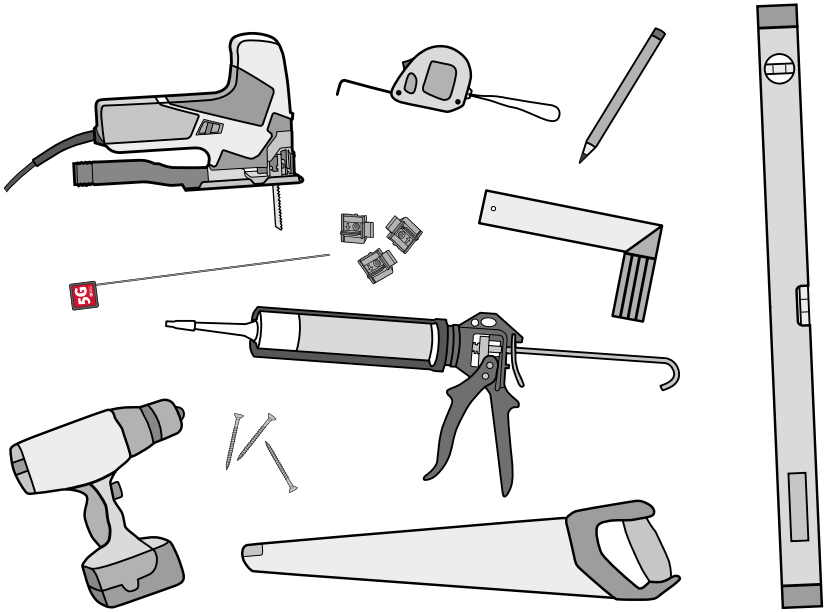

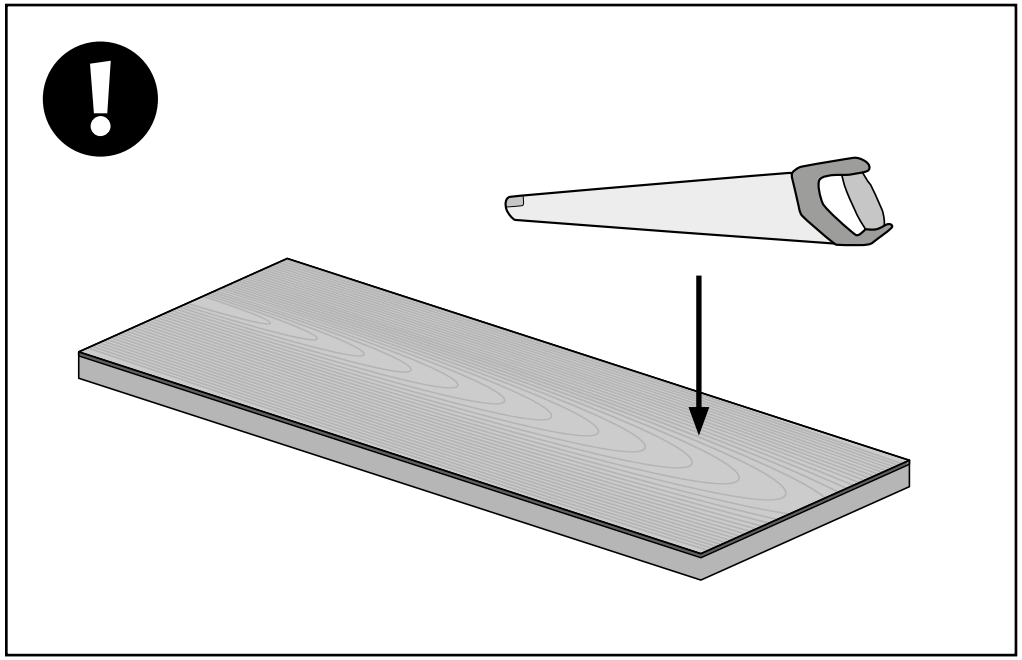

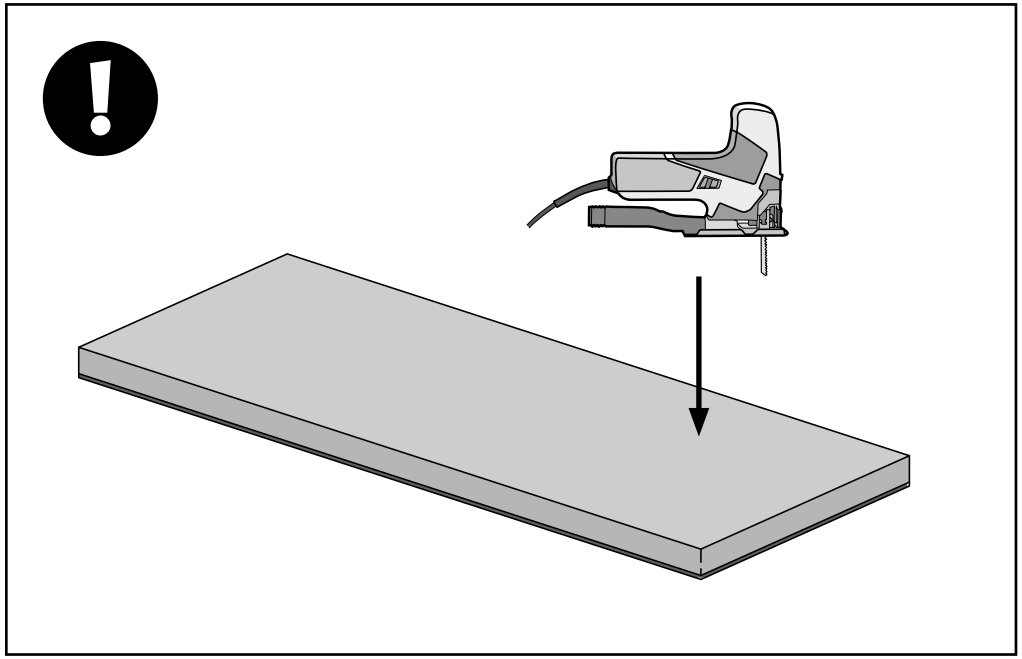

ENGLISH
Important information — Screws, glue, and other necessary materials to attach the rail support/panels to the wall are not included. Make sure that the screws, glue, and other mounting material are suitable for the type of wall that you are installing on. When in doubt, contact your local specialised retailer.

中国人
Important information — Screws, glue, and other necessary materials to attach the rail support/panels to the wall are not included. Make sure that the screws, glue, and other mounting material are suitable for the type of wall that you are installing on. When in doubt, contact your local specialised retailer.

ESPAÑOL
Important information — Screws, glue, and other necessary materials to attach the rail support/panels to the wall are not included. Make sure that the screws, glue, and other mounting material are suitable for the type of wall that you are installing on. When in doubt, contact your local specialised retailer.

FRANÇAIS
Important information — Screws, glue, and other necessary materials to attach the rail support/panels to the wall are not included. Make sure that the screws, glue, and other mounting material are suitable for the type of wall that you are installing on. When in doubt, contact your local specialised retailer.

CAUTION – WOOD DUST
Cutting, sanding or machining wood products produces wood dust. While wood products are not hazardous under OSHA Hazard Communication Standard 29, the International Agency for Research on Cancer (IARC) and the state of California have classified wood dust as a human carcinogen. Precautionary Measures: Equipment should be equipped with a dust collector to reduce airborne wood dust. Wear an appropriate NIOSH designated dust mask to reduce exposure to airborne wood dust. Avoid contact with eyes and skin. In case of irritation, flush eyes or skin with water for at least 15 minutes. In cases of severe irritation, seek immediate medical attention.

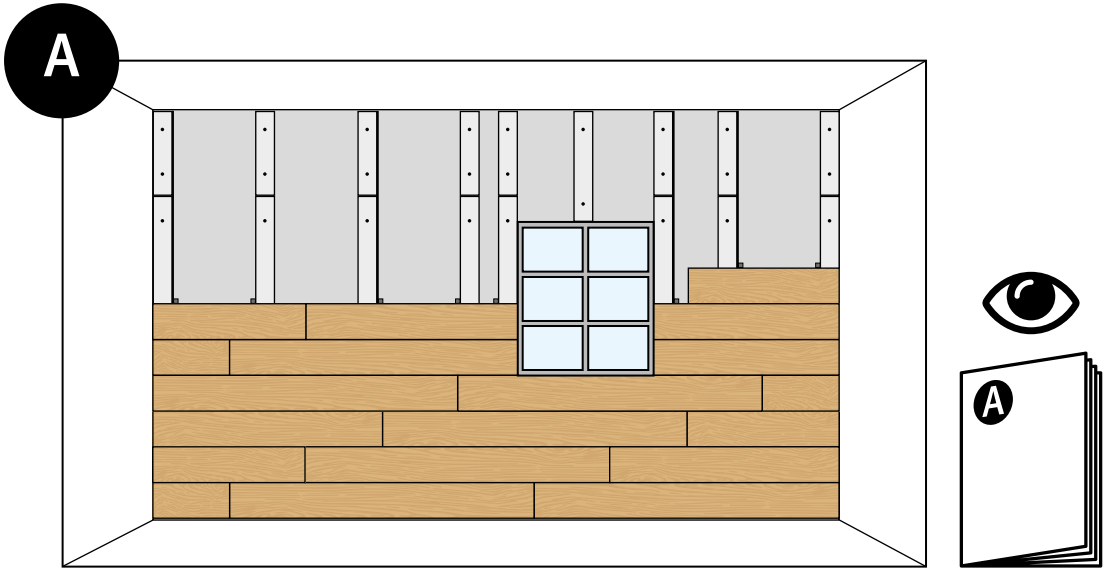
A
A

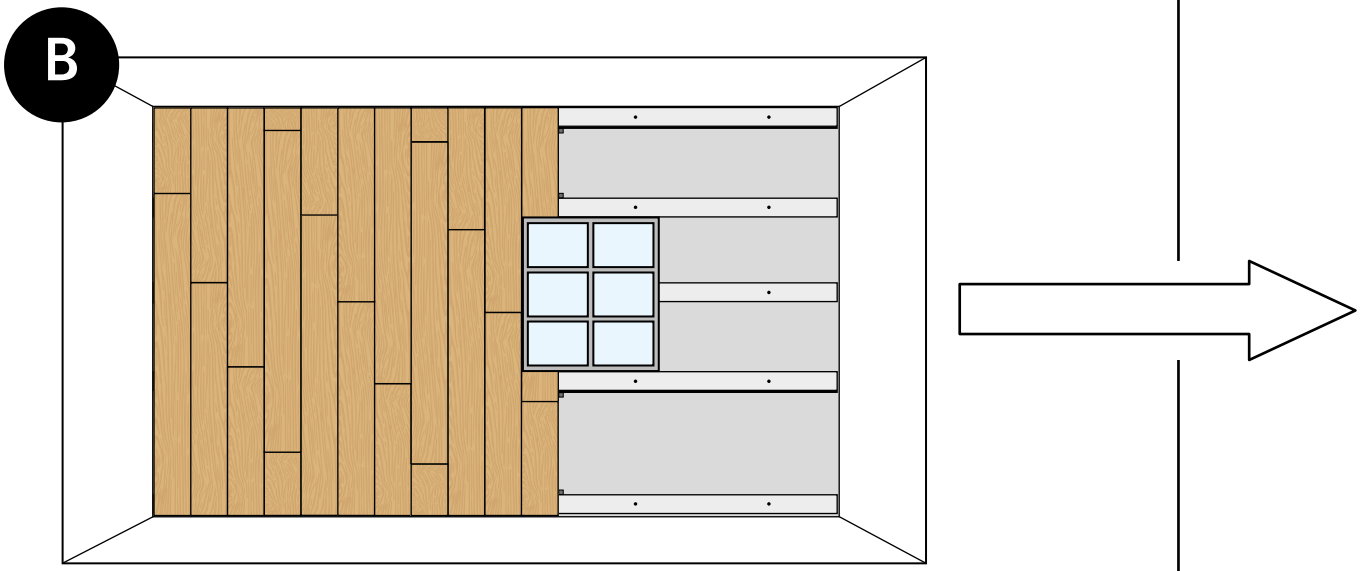
B

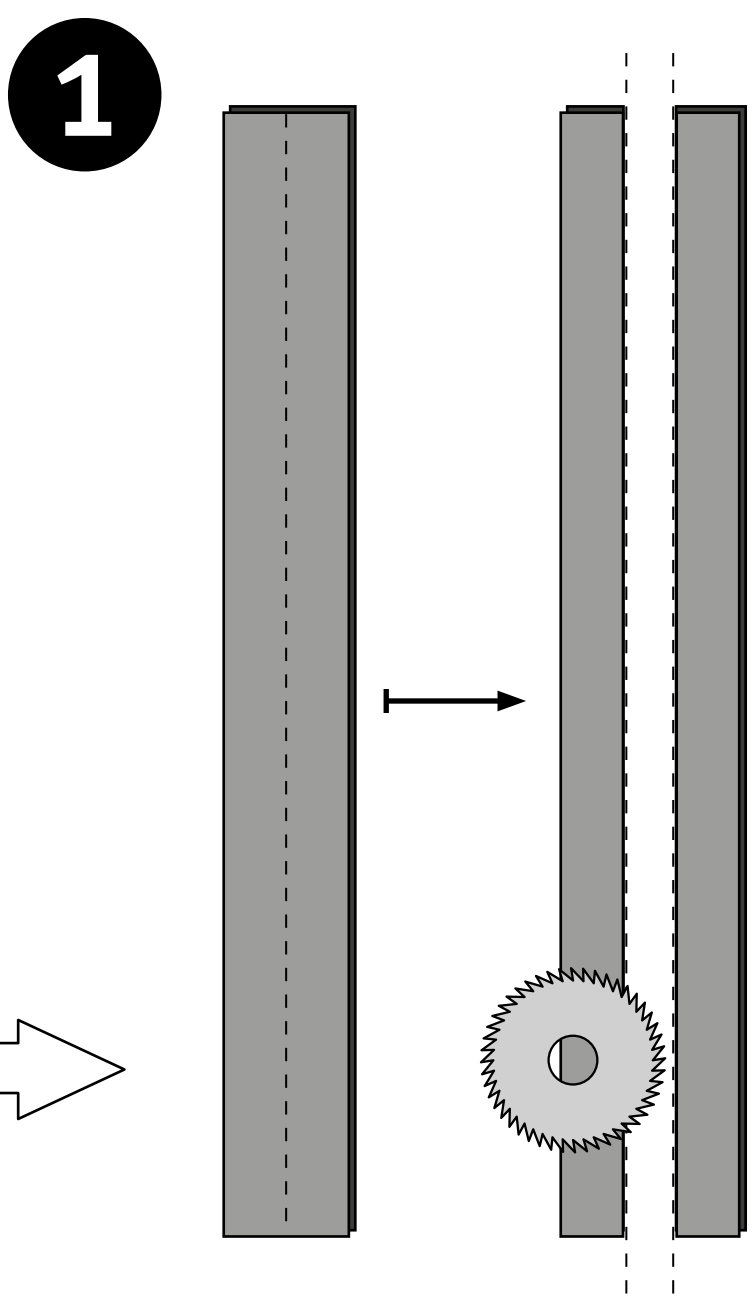
1

2

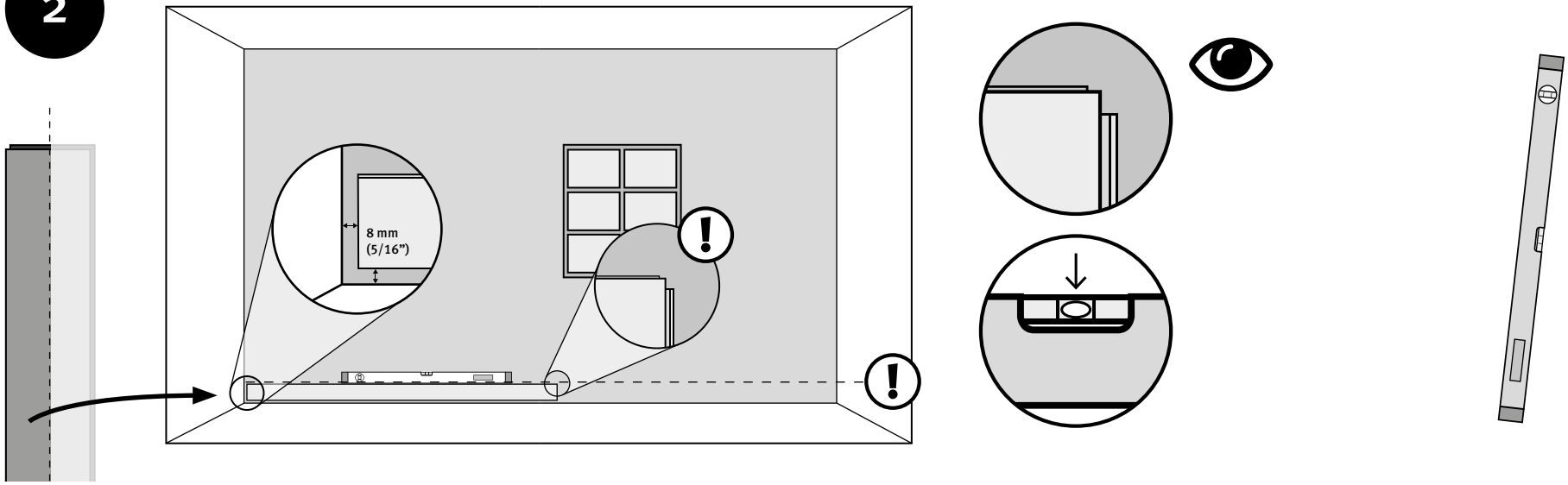

3

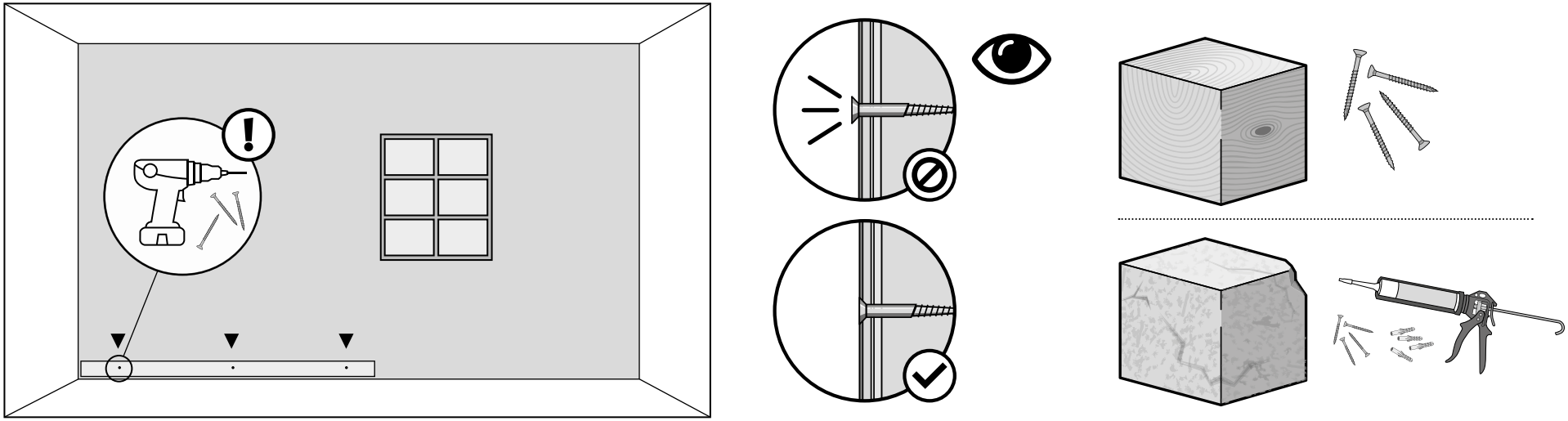

4

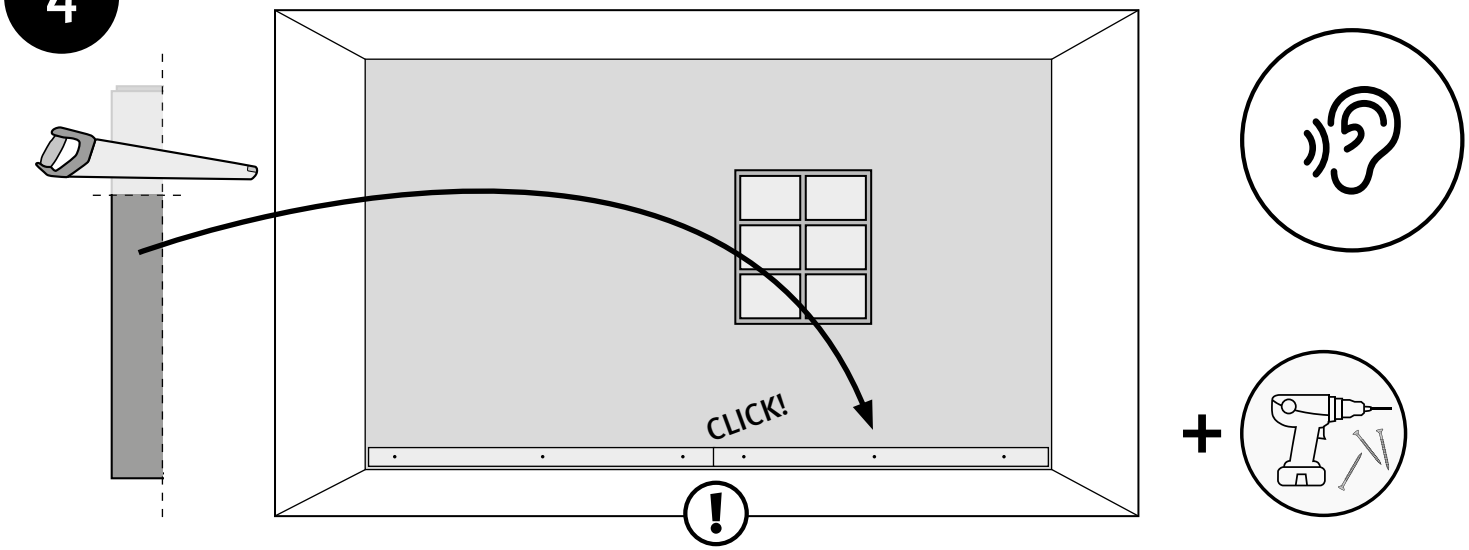

5

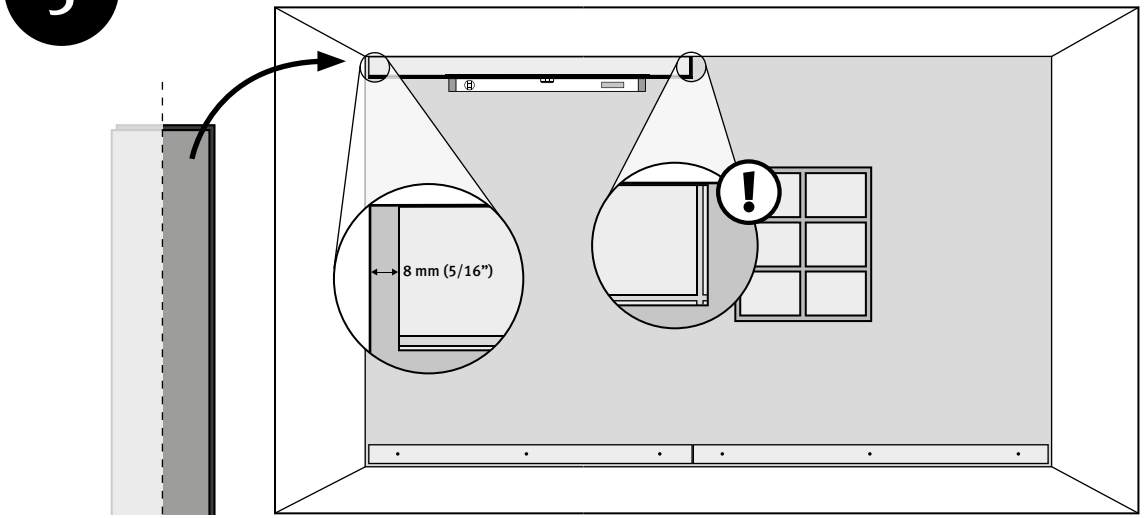

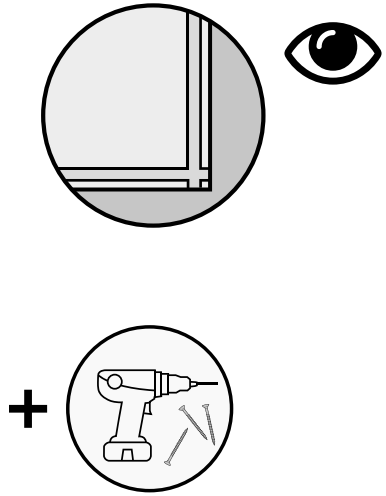

6

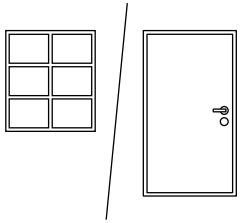

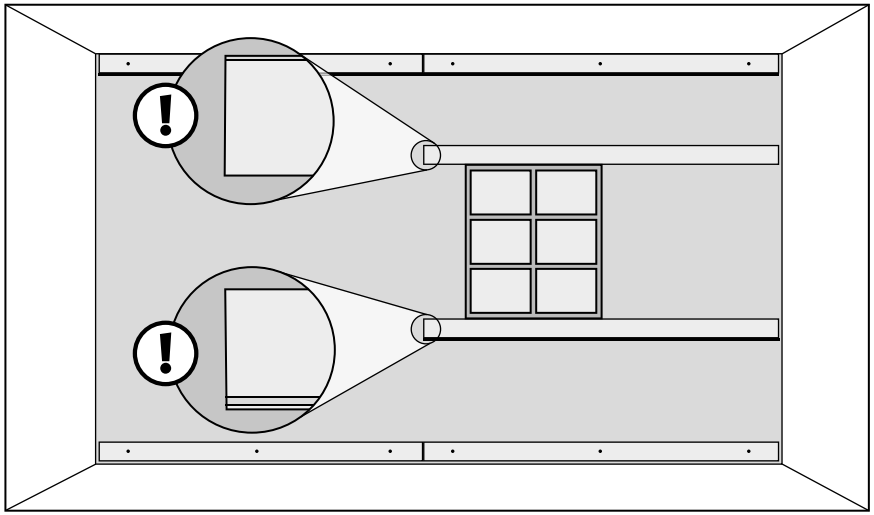

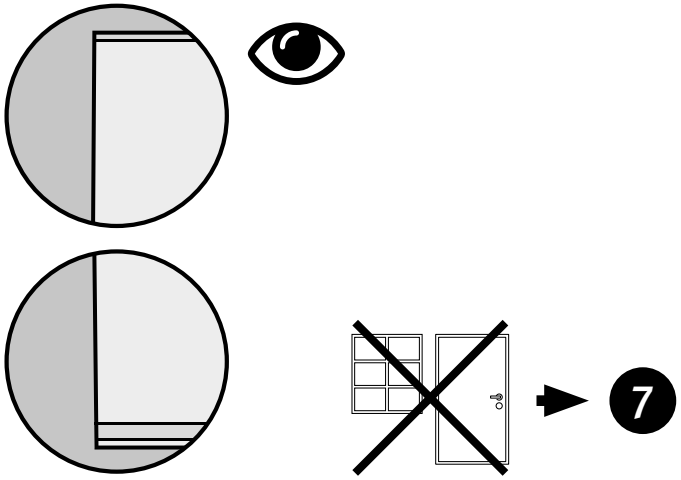

!

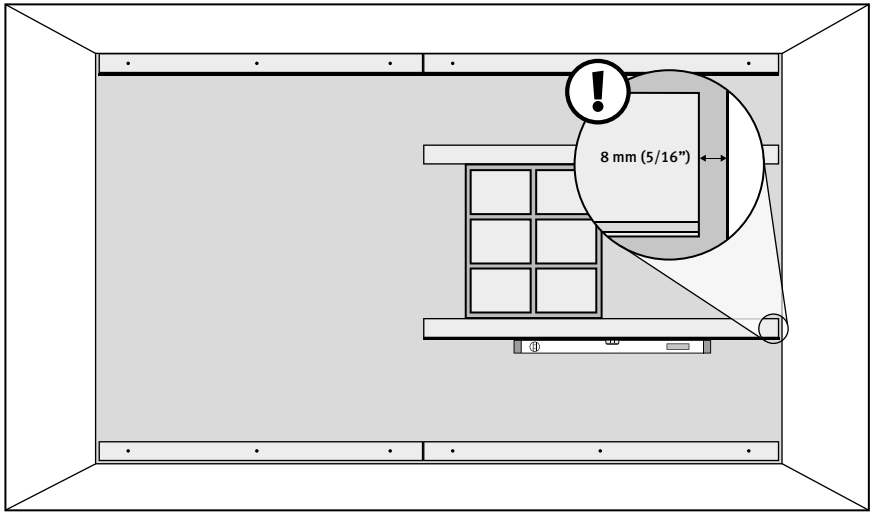

7

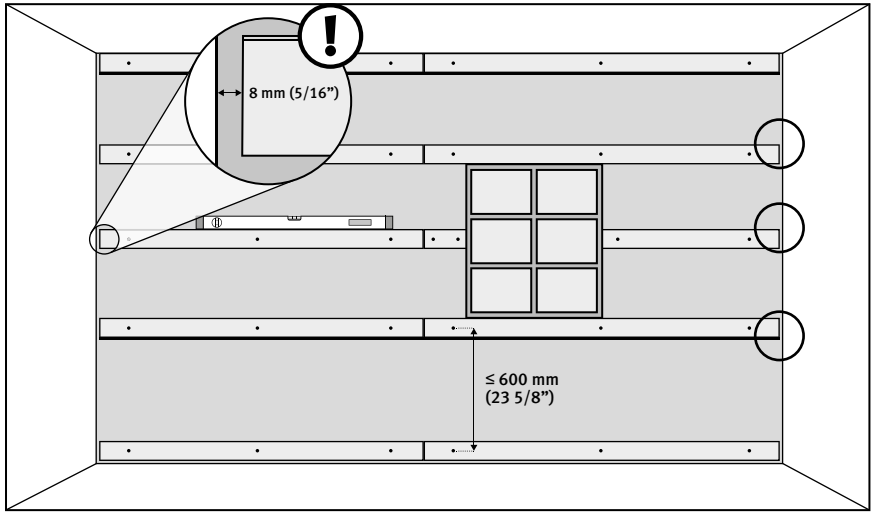

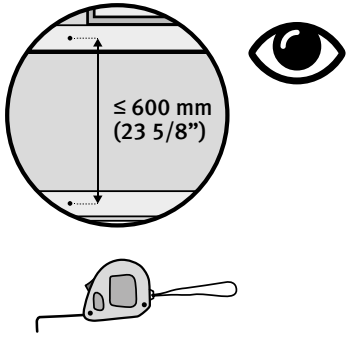

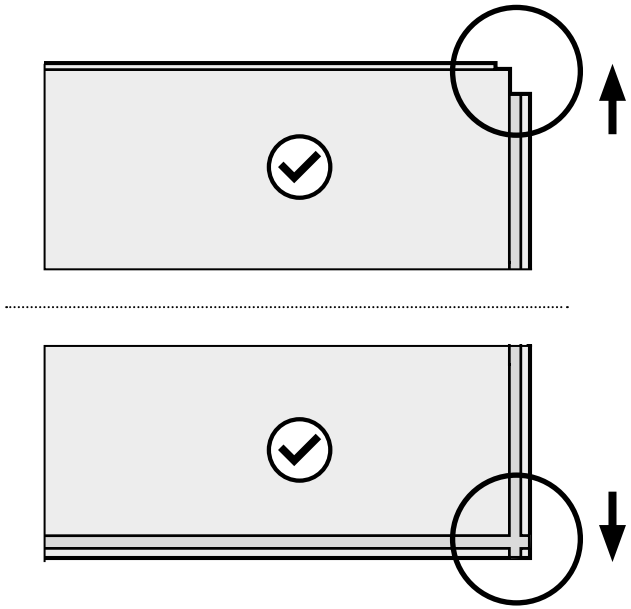

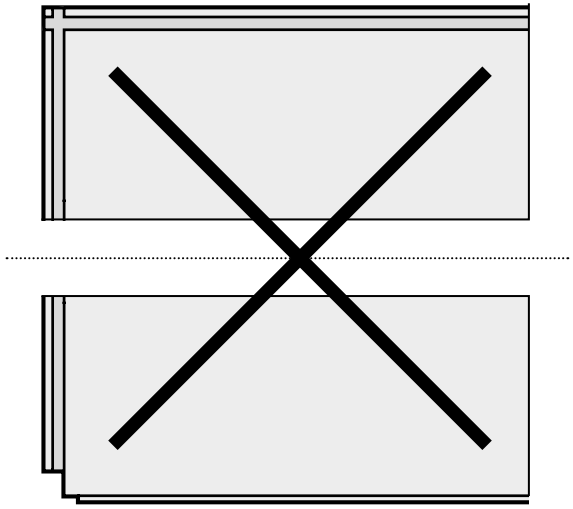

8

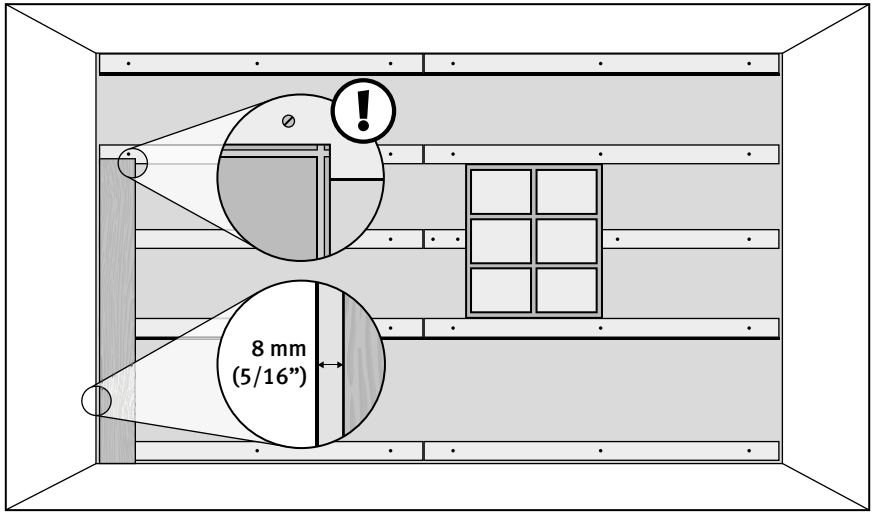

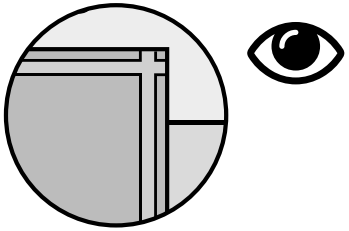

9

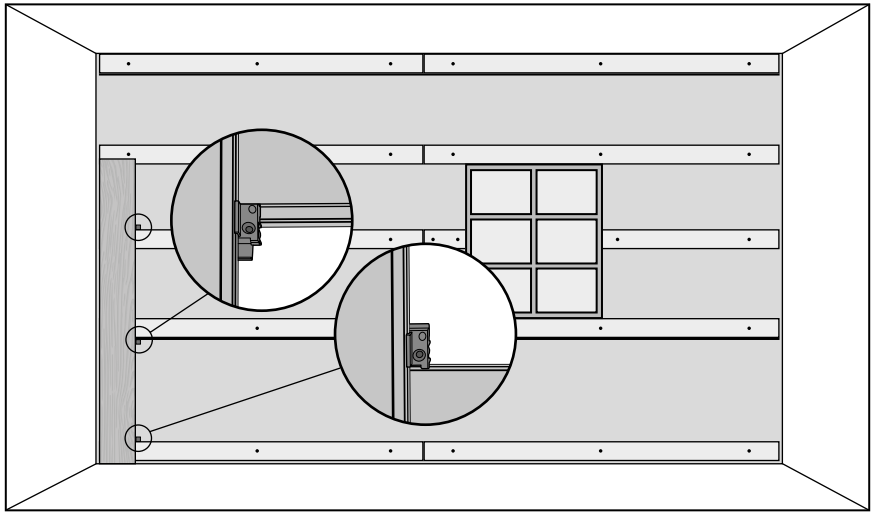

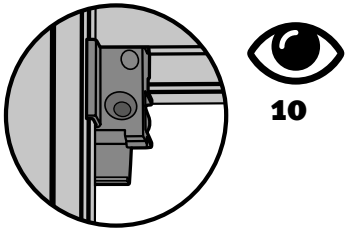

10

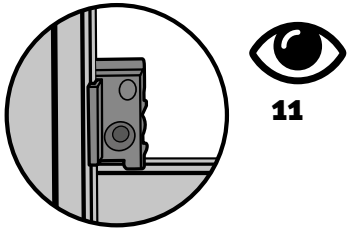

11

10

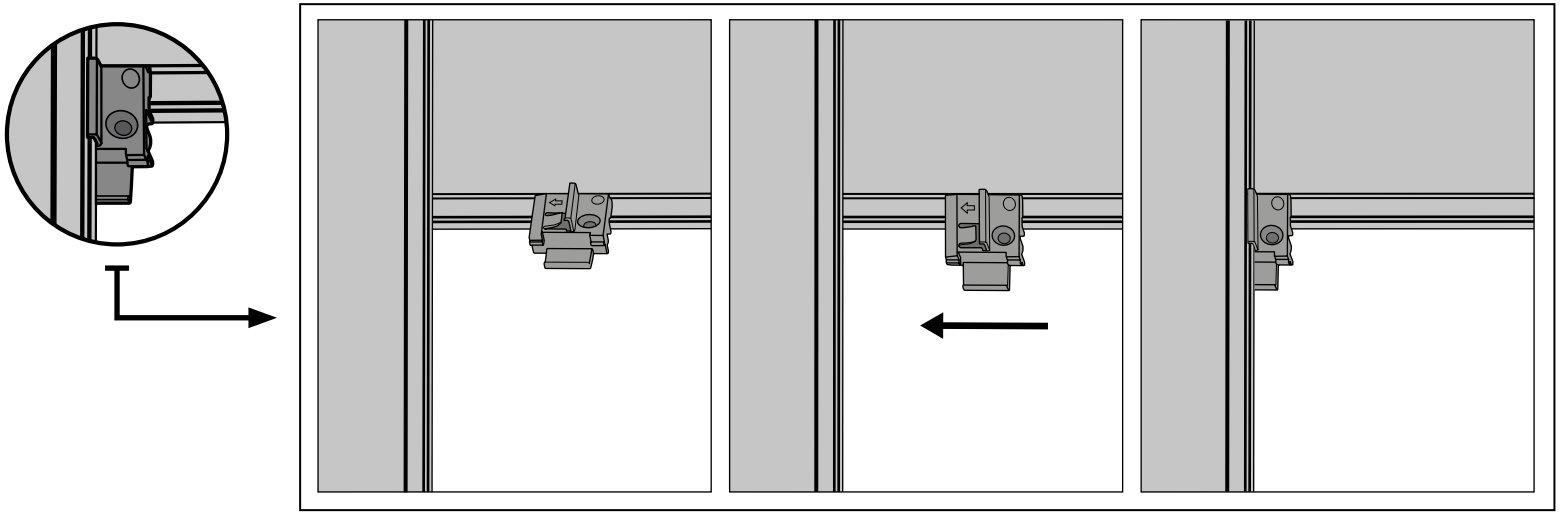

11

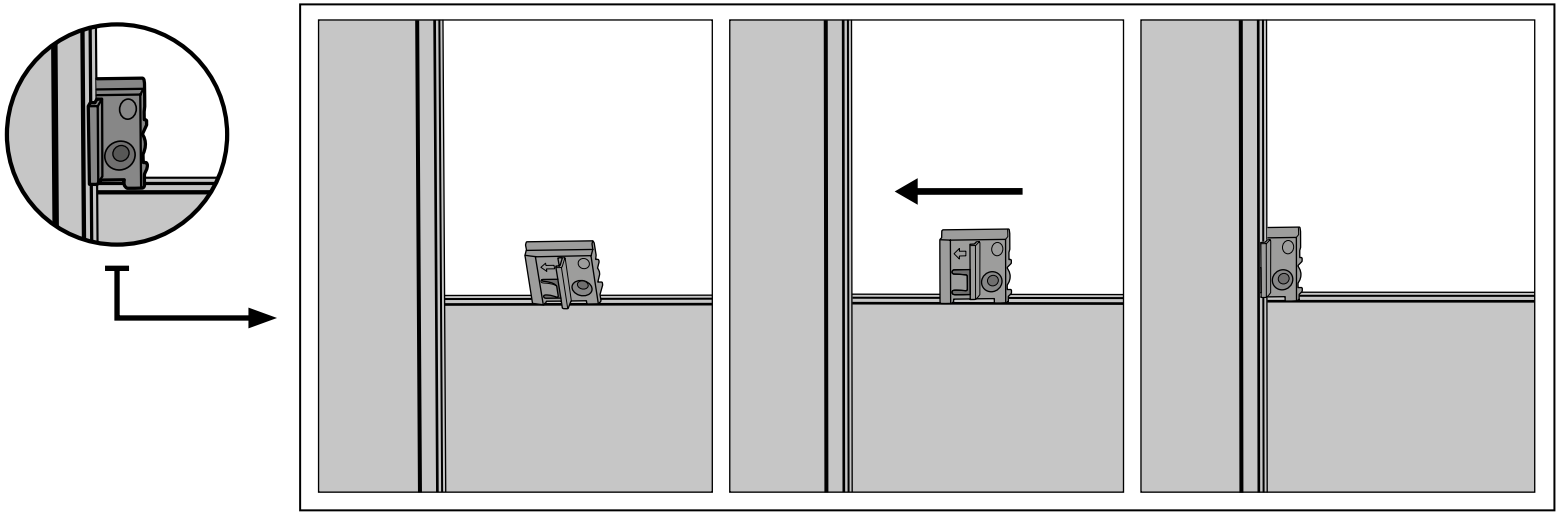

12

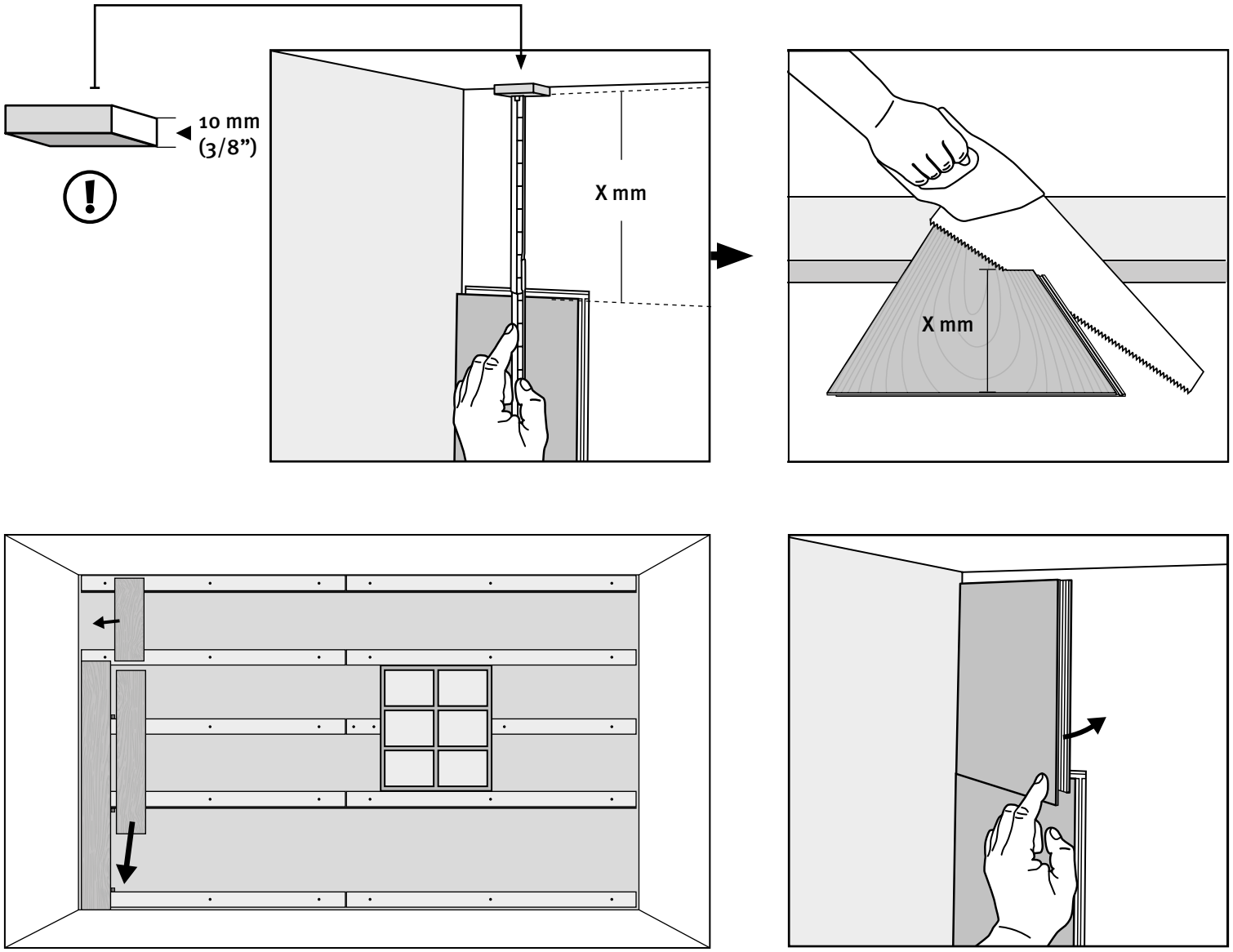

13

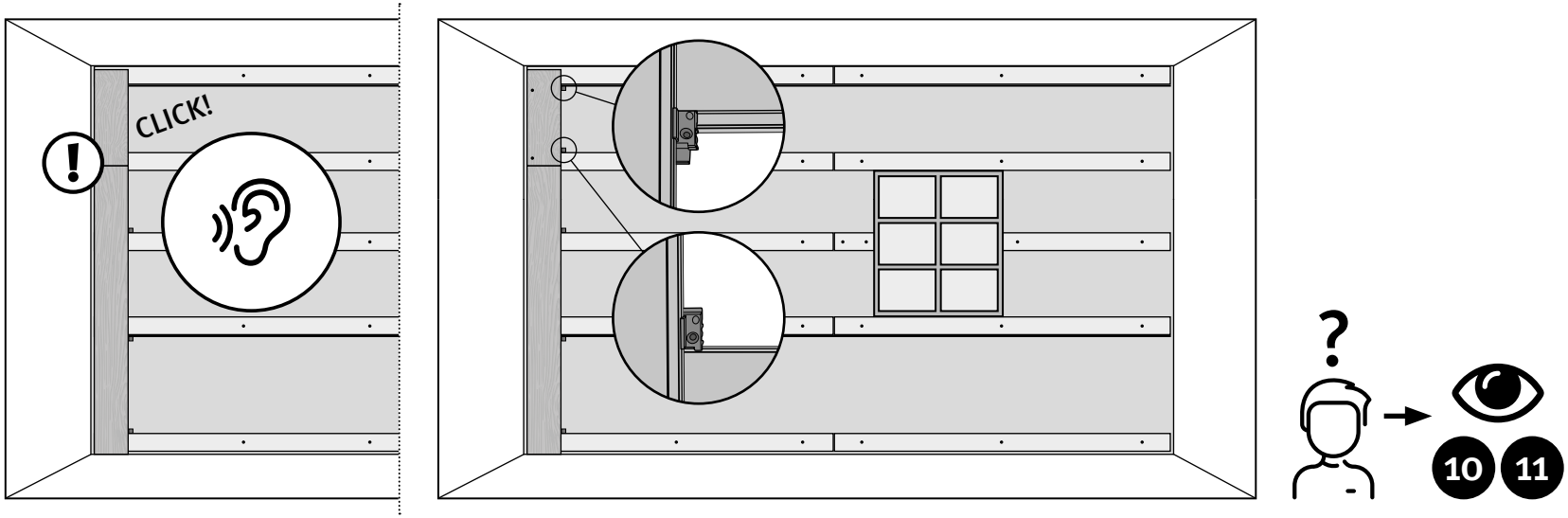

14

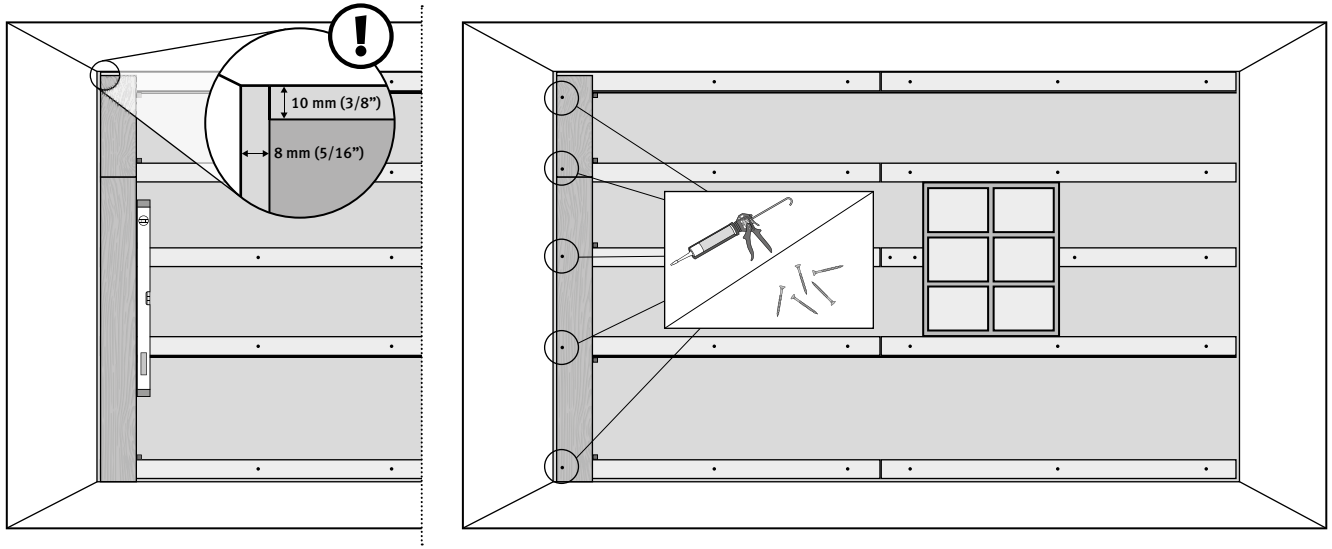

15

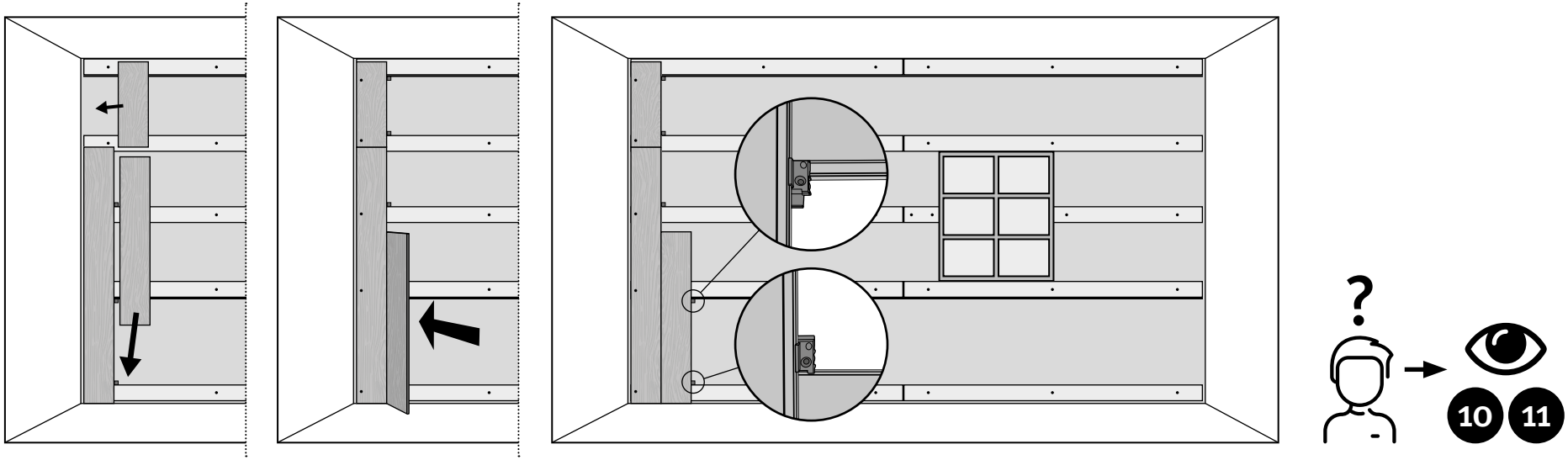

16

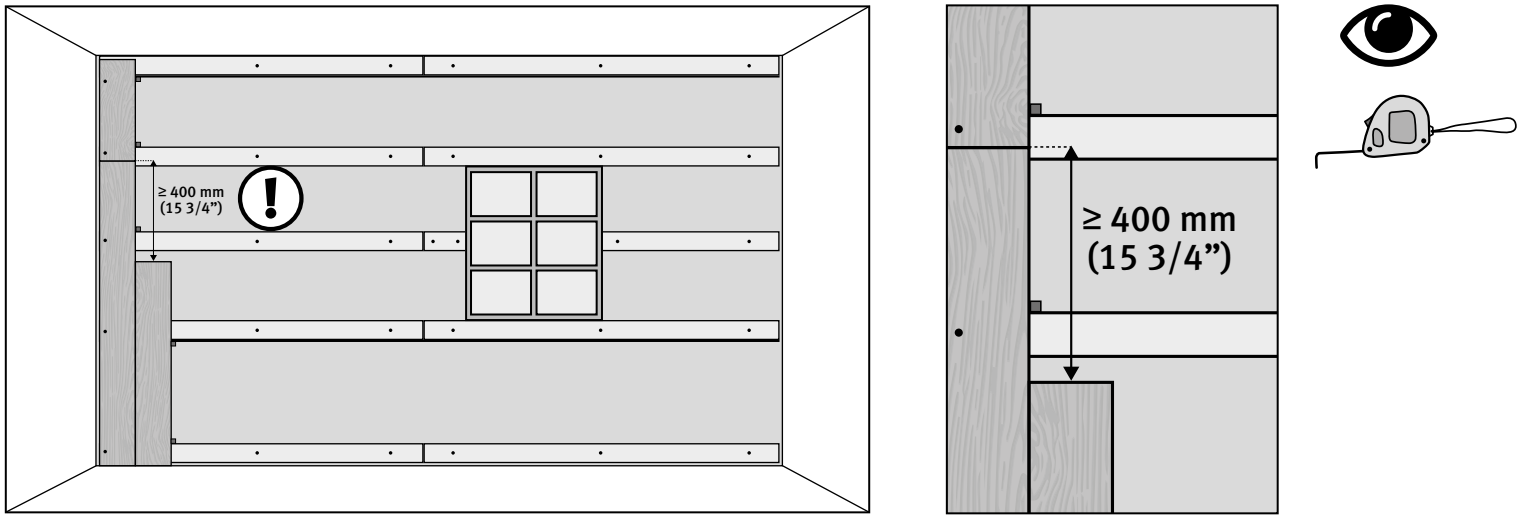

17

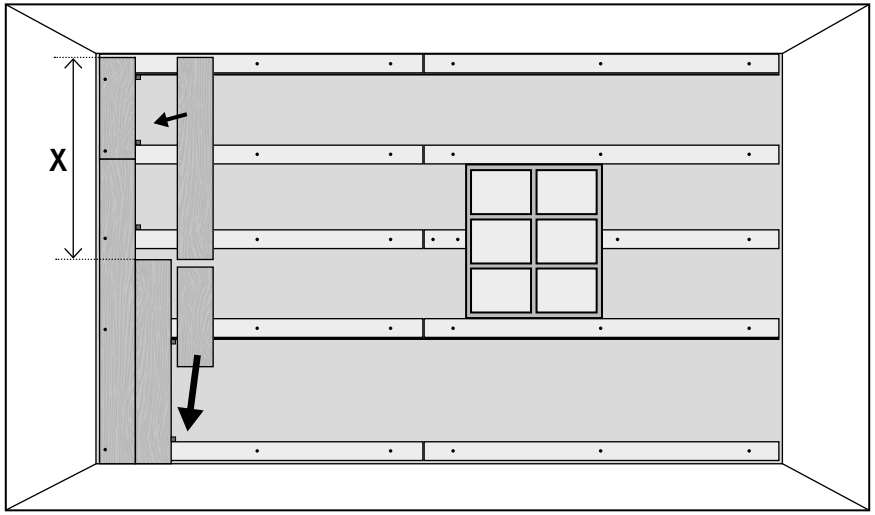

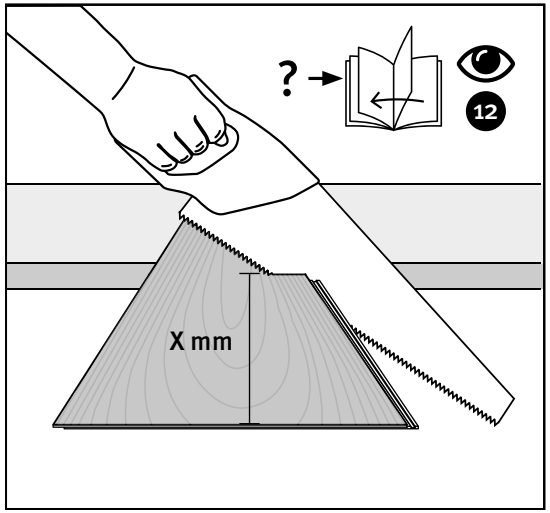

18

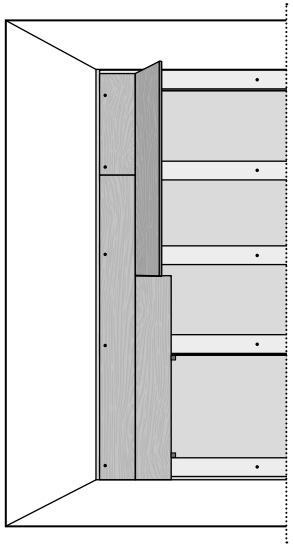

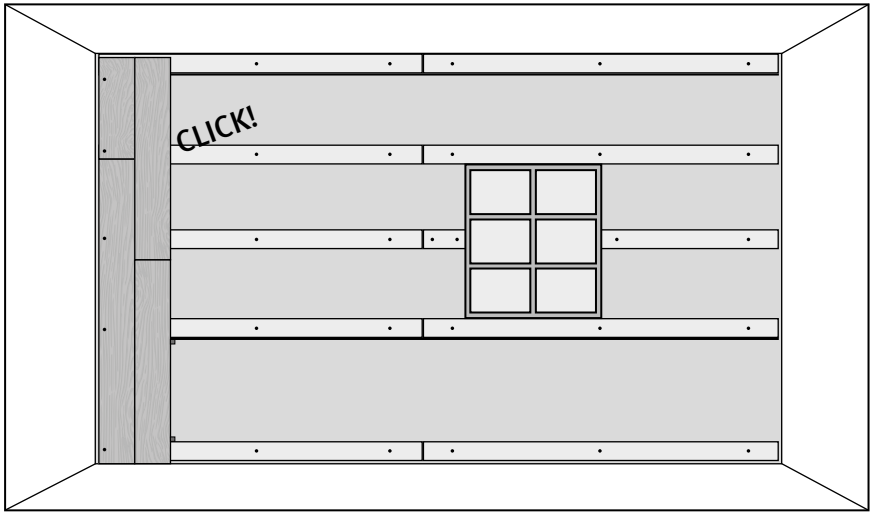

19

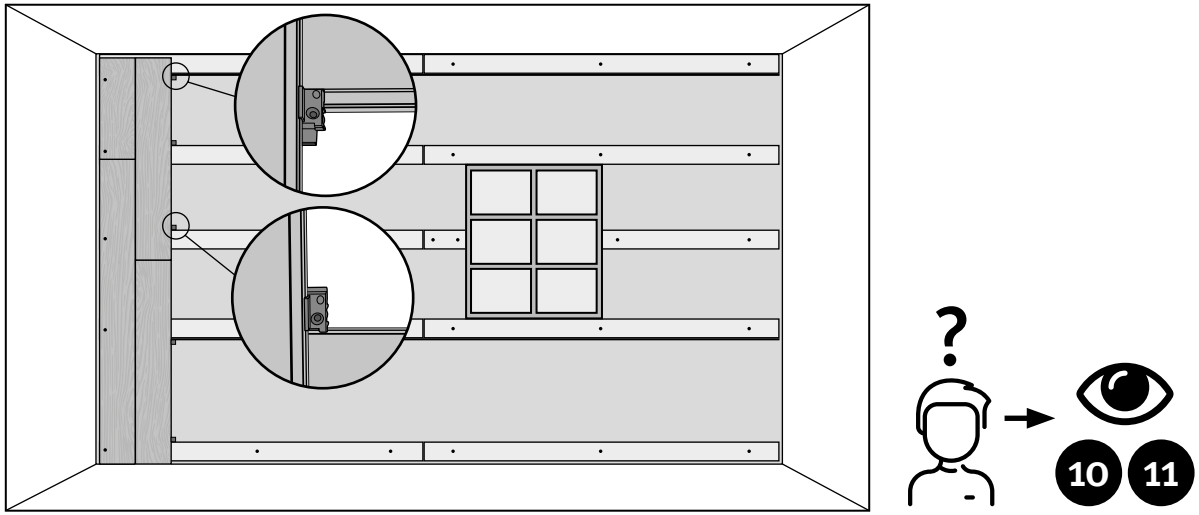

20

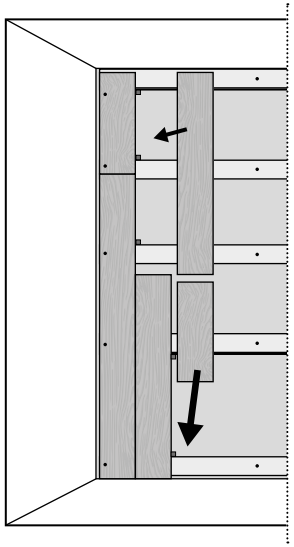

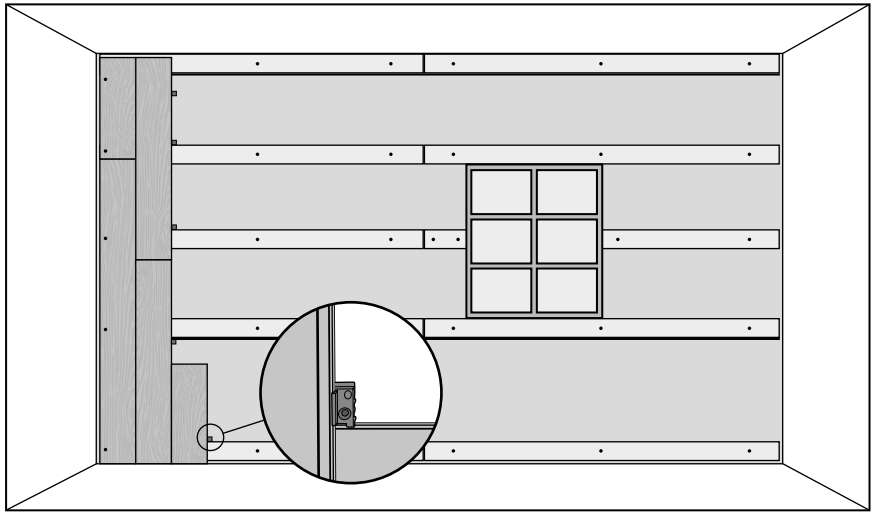

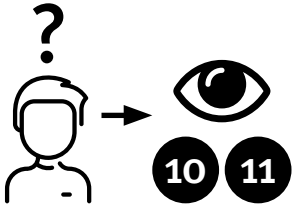

21

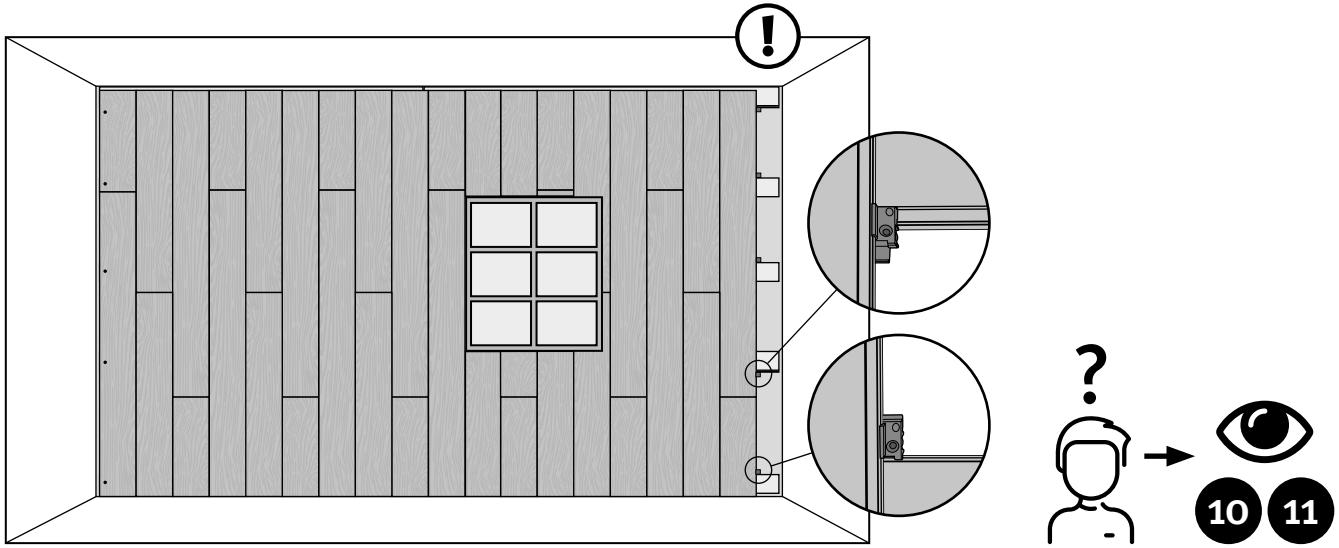

22

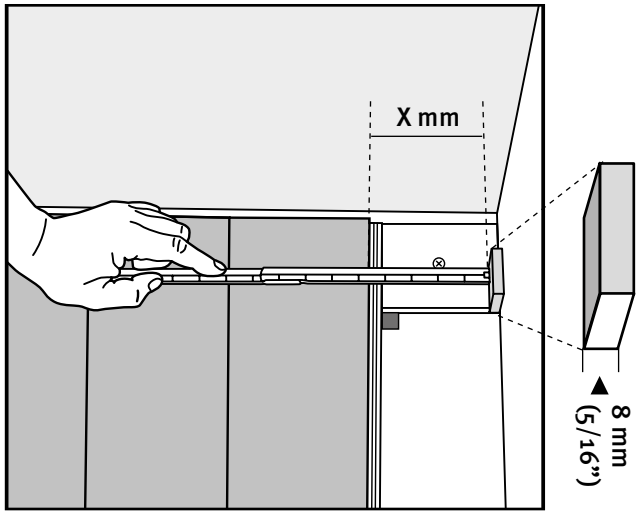

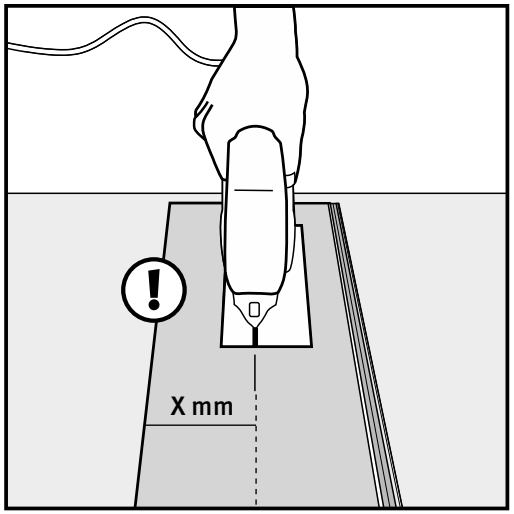

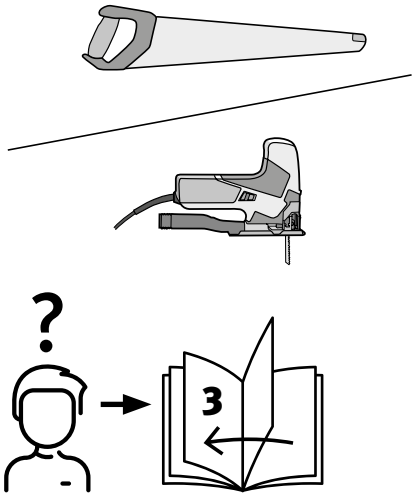

23

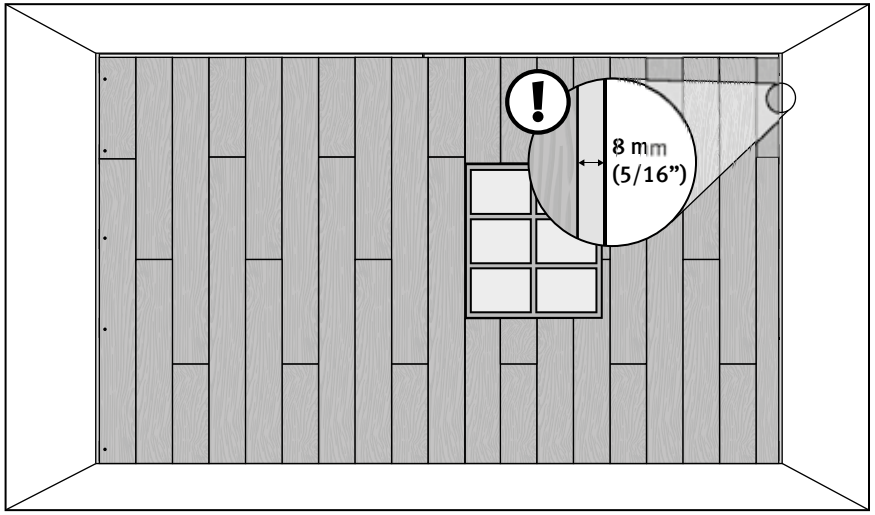

24

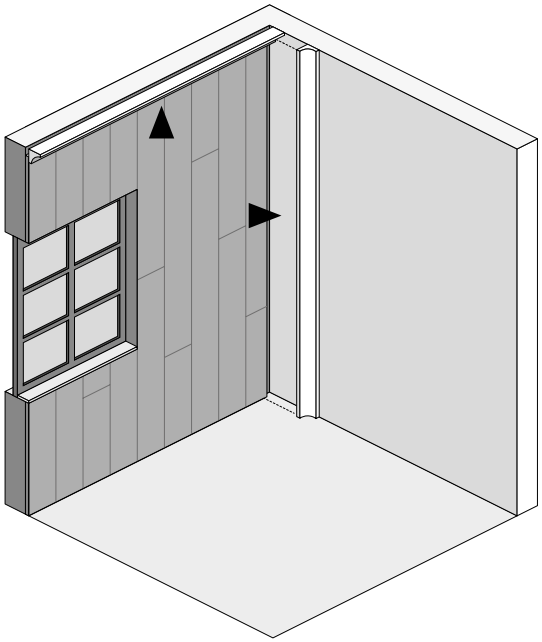

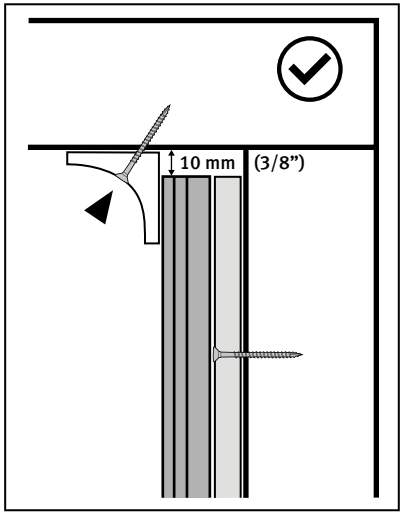

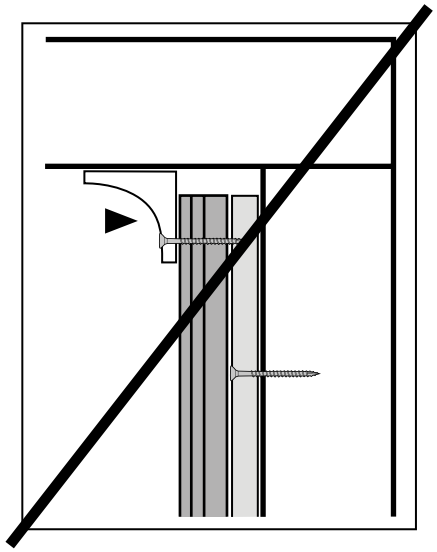

Dismantling | 拆解 | Desmantelamiento | Démantèlemen

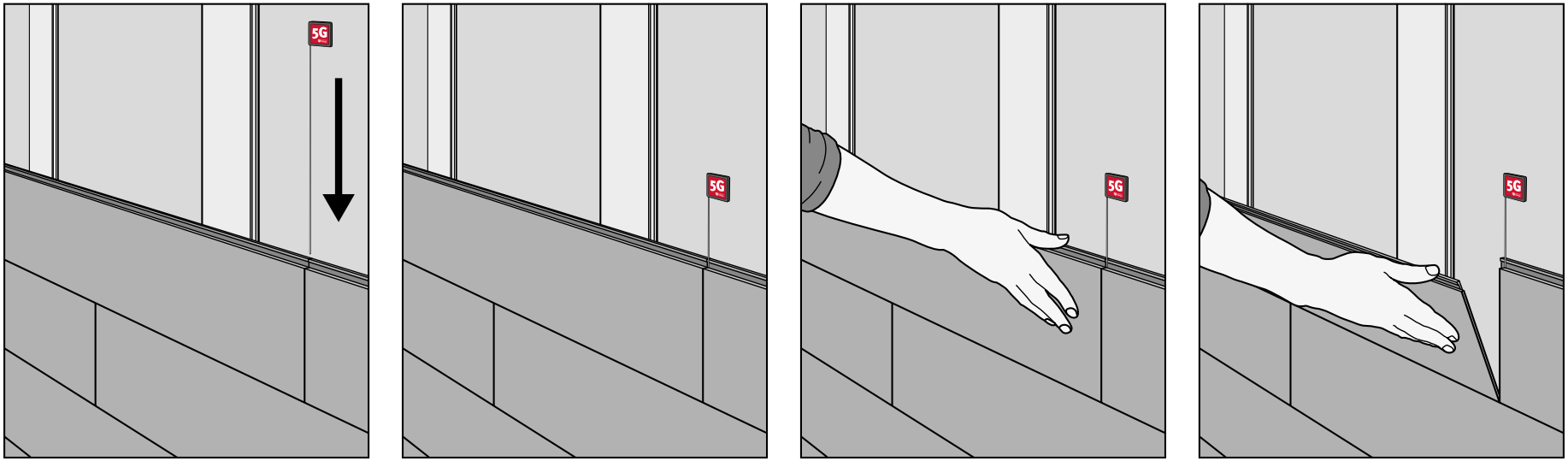

Copyright © 2021 Välinge Innovation AB XXX

Licensed by Välinge

5G® and Dry™ are trademarks for patented technologies – invented, registered and owned by Välinge Innovation AB. Use of the mark or technology is under license.

Patented Technology | www.5gfolddown.com